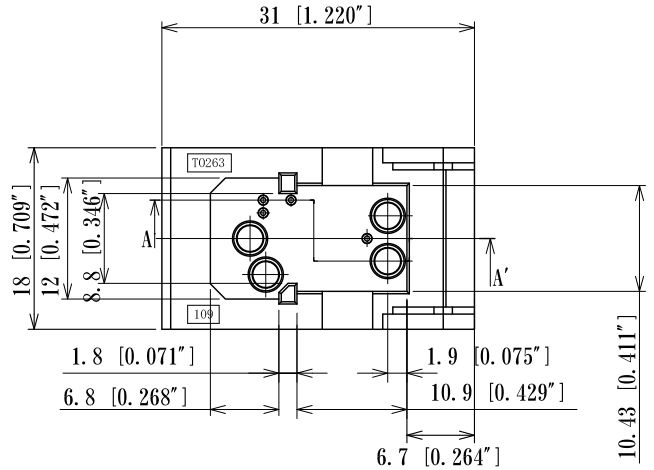

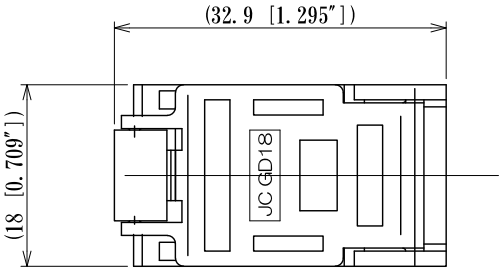

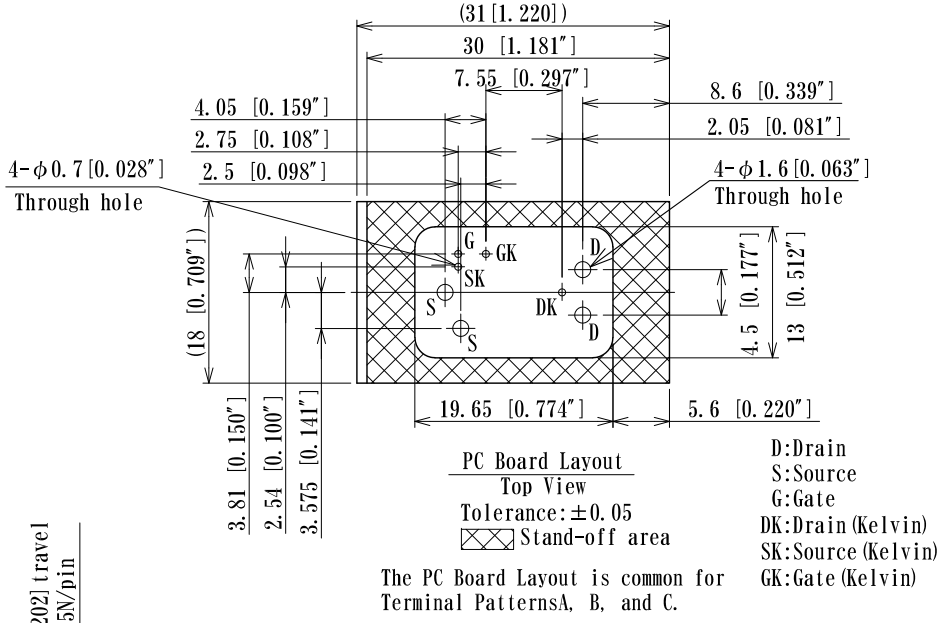

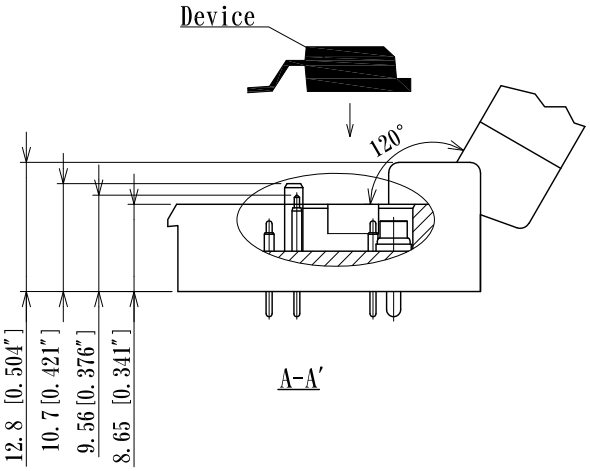

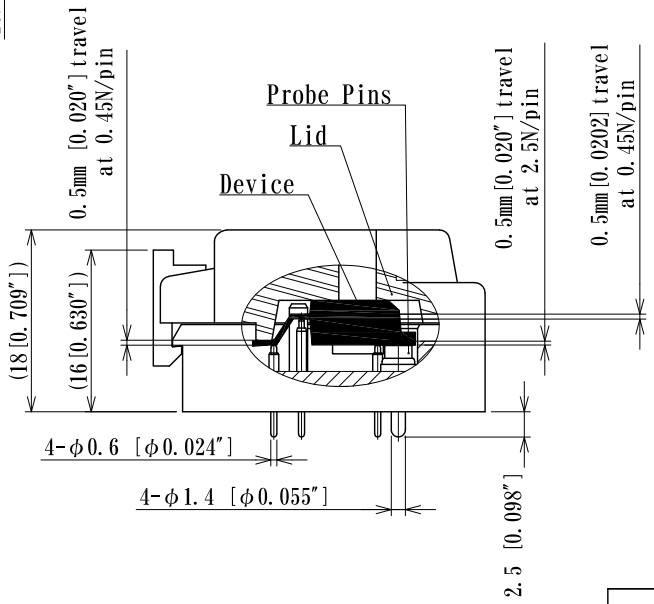

Terminal Pattern (Top View)

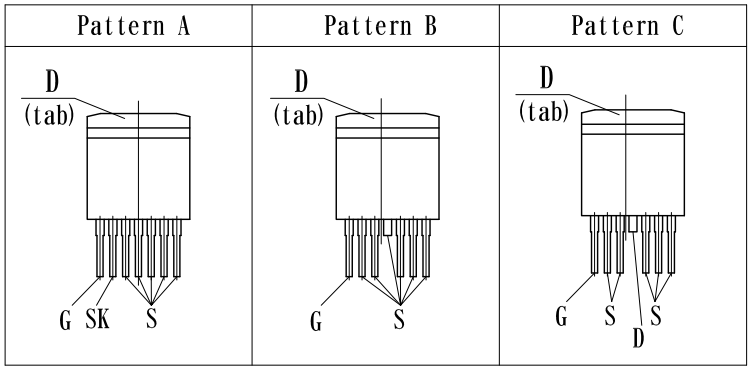

SPECIFICATION

1. DURABILITY : 100,000 cycle (Mechanical)
2. CONTACT RESISTANCE : 50mΩ max (Socket initial)
3. CURRENT RATING : 12A at 25℃ (Between Drain and Source)
   Room temperature with 30℃ T-Rise
4. WITHSTANDING VOLTAGE : DC2000V 1 minute at 25℃ (Between Drain and Source)
5. INSULATION RESISTANCE : 500MΩ min at DC500V
6. OPERATING TEMPERATURE : -40℃～+200℃ (Including Probe pin T-Rise.)

Date 2024/06/25		JC ELECTRONICS CORPORATION
Materials Finish		Body : High Temp Thermoplastic Other parts : SUS, etc.
Dimensions Style mm [inch]		Title T0263-7 TEST SOCKET
Third Angle Projection		Part Number GD18-T0263-7-K-109
Rev. No	0	

Ⓐ