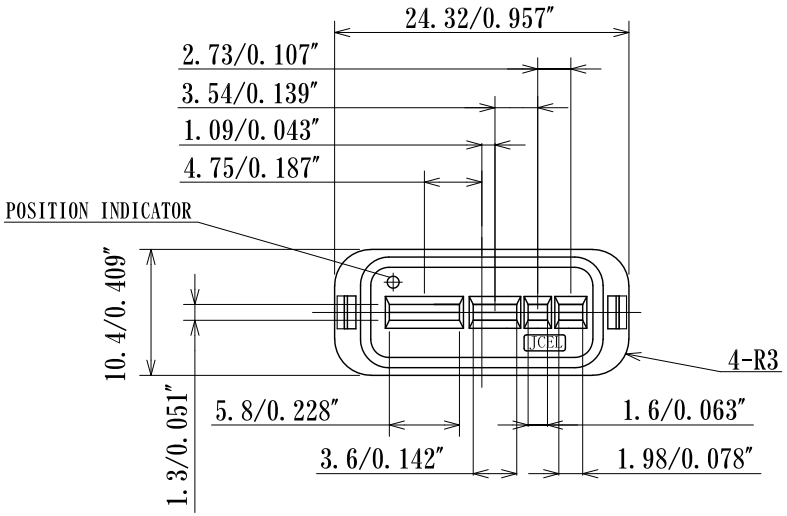

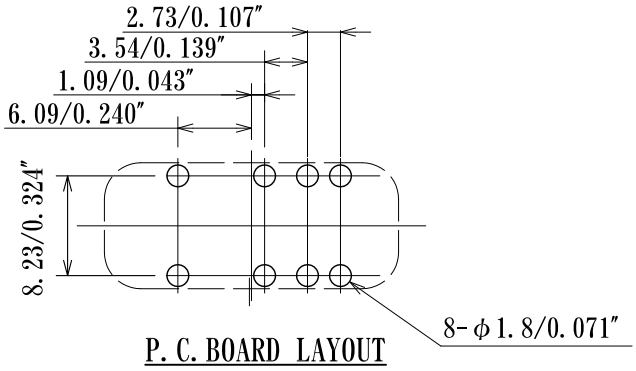

P. C. BOARD LAYOUT

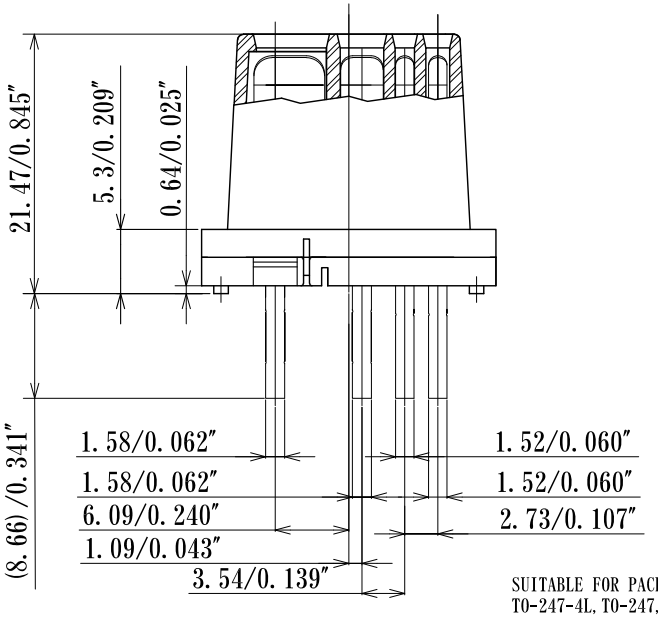

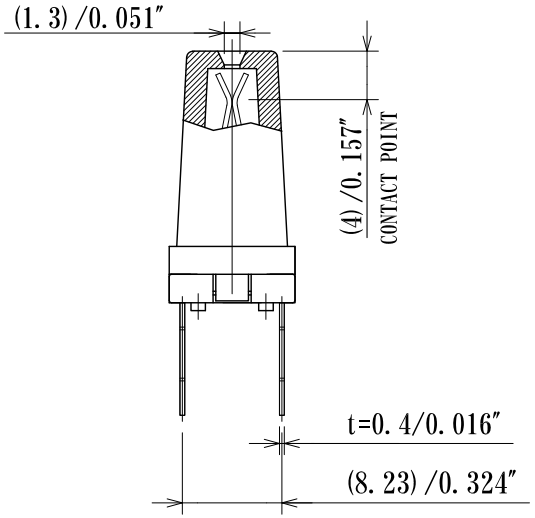

T4PNF-L214-ST-HT
T4PNF-L214-ST-HT-P
T-Rise Current Chart
Between Drain and Source (Reference)

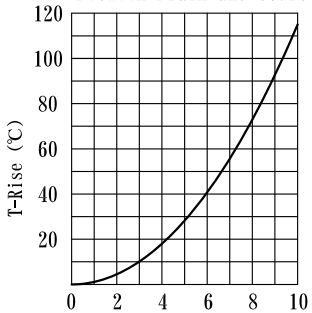

SUITABLE FOR PACKAGES INCLUDING
TO-247-4L, TO-247, TO-3P, TO-220
(Some Package might not be usable.)

Specifications		High temperature type High voltage type	
P/N		T4PNF-L214-ST-HT	T4PNF-L214-ST-HT-P
Materials	BODY	PPS BLACK	PEEK (Low outgassing)
	PIN	Stainless Steel Au plating over Ni plating	
Mating Durability		10,000 cycles *	
Contact Resistance		50 mΩ max	
Insulation Resistance		500 MΩ min	
Withstanding Voltage		DC2000V 1 mitute at 25℃, AC1500Vrms 1 minute at 25℃ (Between Drain and Source)	
Temperature Range		-55℃～+220℃ **	

Date 2024/06/12		JC ELECTRONICS CORPORATION
Materials Finish		
Dimensions Style mm [inch]		Title TO TEST SOCKET
Third Angle Projection		Part Number T4PNF-L214-ST-□□
Rev. No	0	

Ⓐ